Combined Charging
the universal charging system

Robert Weber, BMW
Matthias Kübel, Volkswagen
Heiko Dörr, Coordination Office

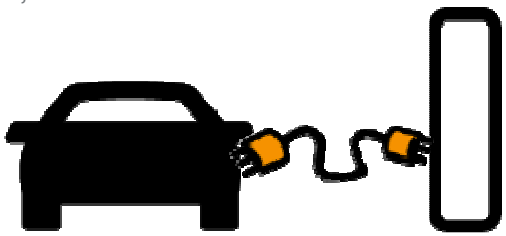

Current Status Charging Systems

The main regions for e-Mobility have developed individual charging systems. One global solution needed.

1st Step: start of e-Mobility with AC and DC

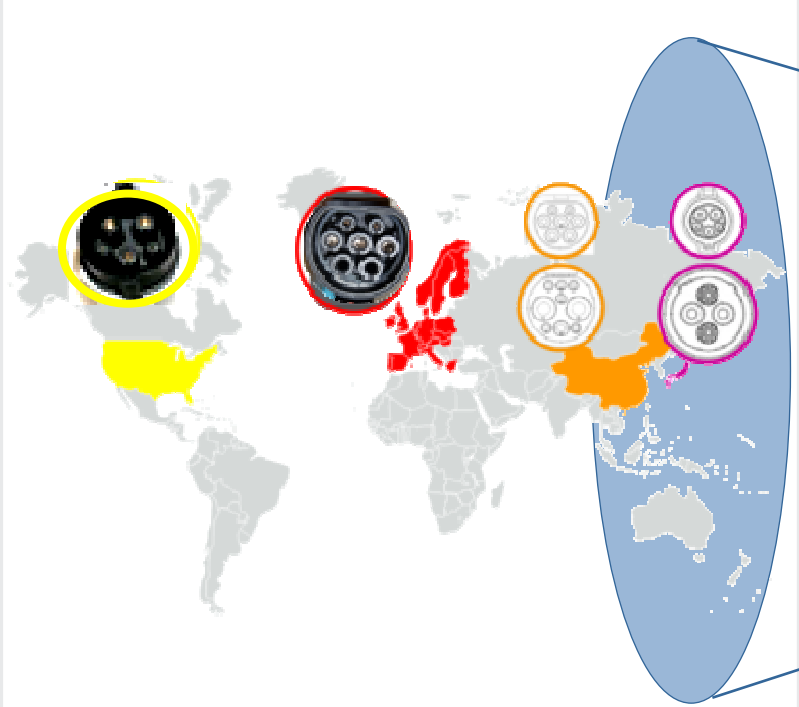

Regional, mutually incompatible connectors

2nd Step: after migration

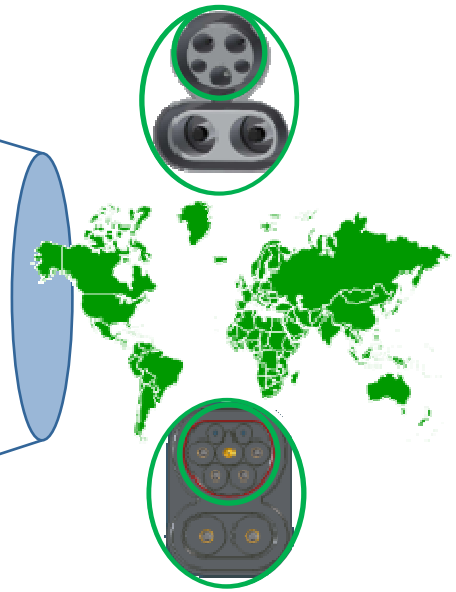

Combined Charging System for global AC and DC charging

Costumer Expectations drive Charging Capabilities

All DC fast-charging should be designed to meet customer needs and wants.

Long range travels

- ICE vehicles have a wide operating range
- Operating range of current Battery EVs is comparably limited before refueling
- Consumers expect convenient vehicle fueling/charging

Power access at multifamily homes

- Many consumers don't have access at home to a convenient place to charge a plug-in EV.
- Consumers still need a place to charge at/near home

Emergency charging

- Battery driving range is sufficient for the vast majority of everyday trips
- Uncertainty of range limits to be overcome by fast charging spots

Design Requirements for the Combined Charging System

AC national standards remain the same.
Two additional Pins allow DC charging in the same vehicle inlet while accepting the legacy AC connector.

Type 2 Core

up to 8 h

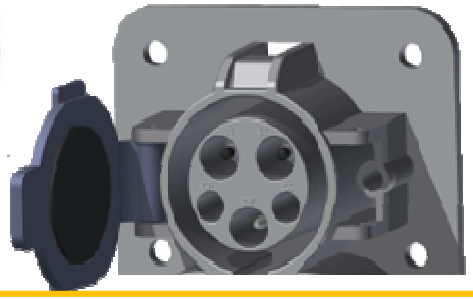

Type 1 Core

How to speed up from up to 8 h charging to 20 min?

How the Combined Charging System Responds

AC national standards remain the same.
Two additional Pins allow DC charging in the same vehicle inlet while accepting the legacy AC connector.

Design DC Combo 2 Inlet

The Combo 2 inlet provides comprehensive functionality at a high level of safety.

Safety features

1. Diagnosable lock
2. Proximity and control pilot

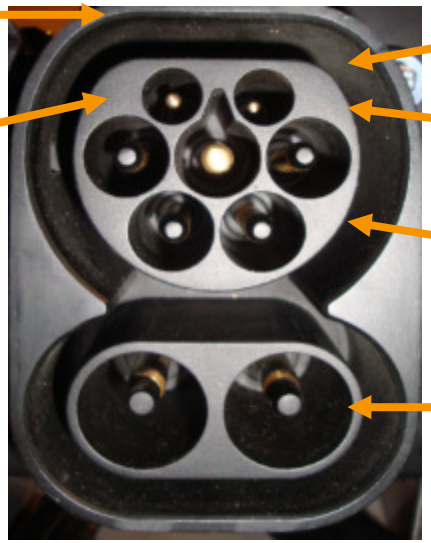

Function

1. 1-phase AC charging with Type 2
2. Integration into smart grid
3. 3-phase AC charging with Type 2
4. High power DC charging via dedicated pins

Charging Connectors for the Combined Charging System

The Combo inlet shall serve as a universal plug for all relevant charging scenarios.

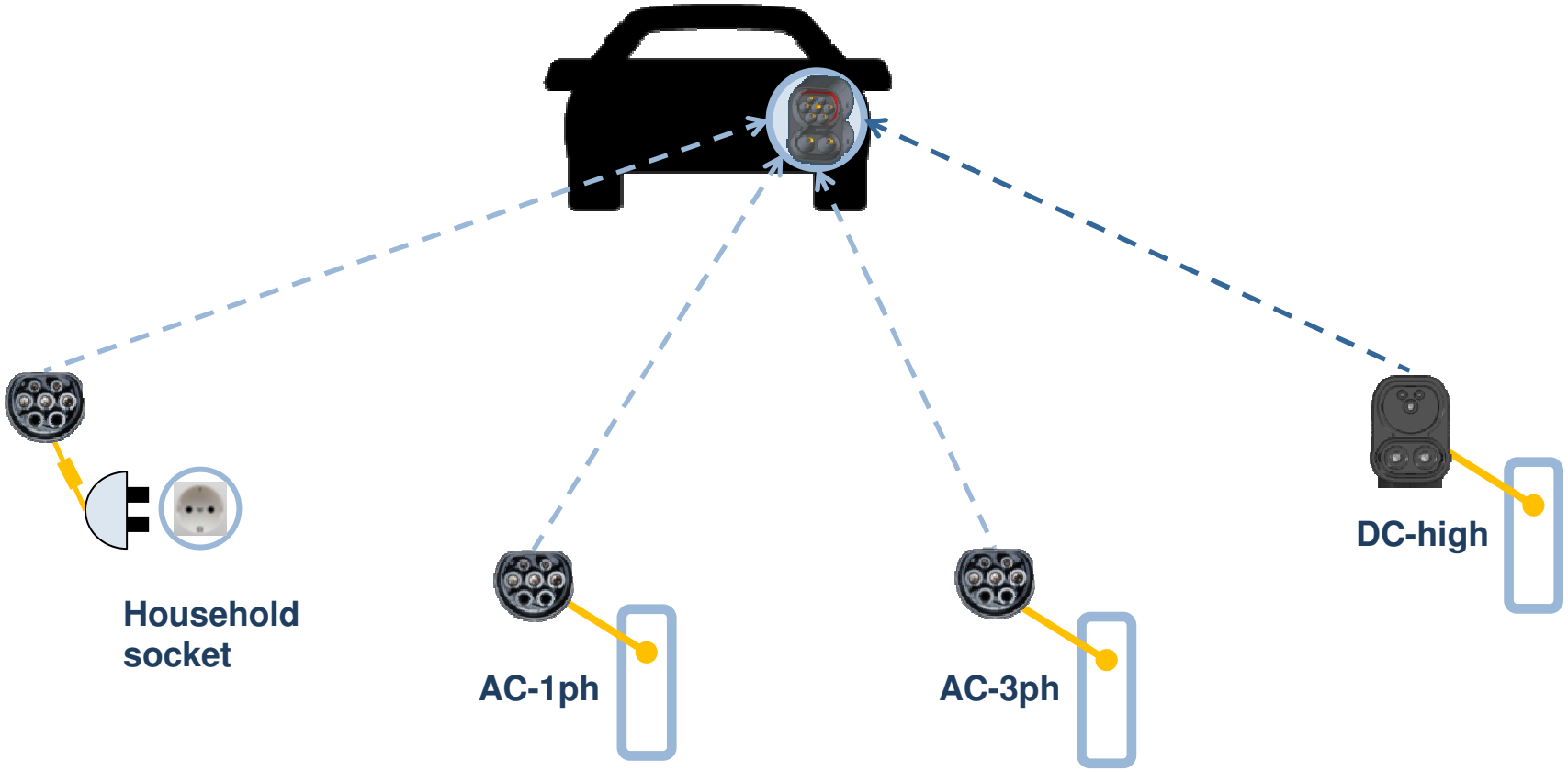

Combined Charging Connector Concept

The Combined Charging System integrates the existing AC connectors, allowing for one standard global vehicle interface for AC and DC charging.

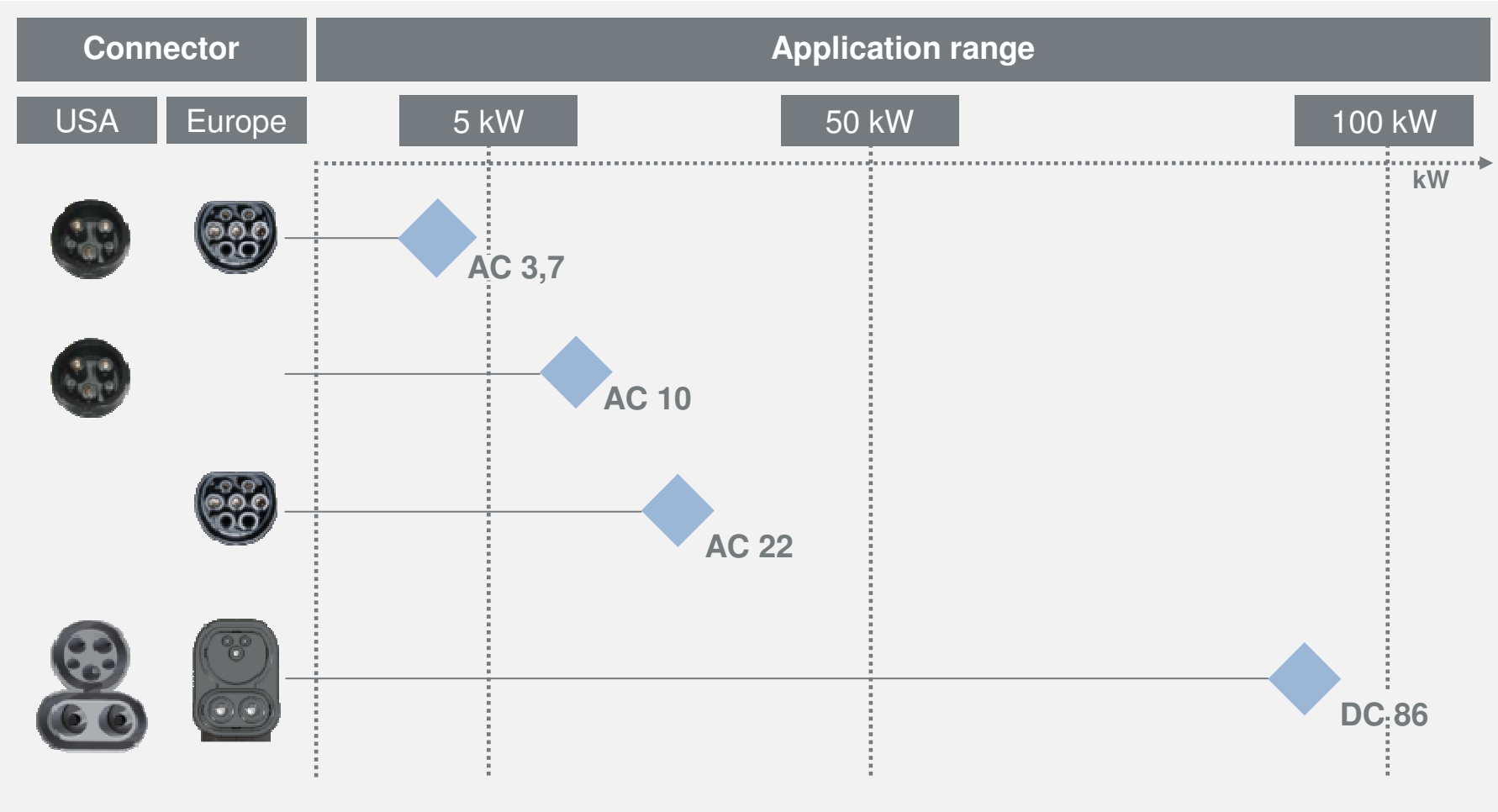

Comparison Combo 2 and alternative Approaches

Integration of AC and DC into a single inlet provides high freedom for vehicle design and in addition a reduction of size.

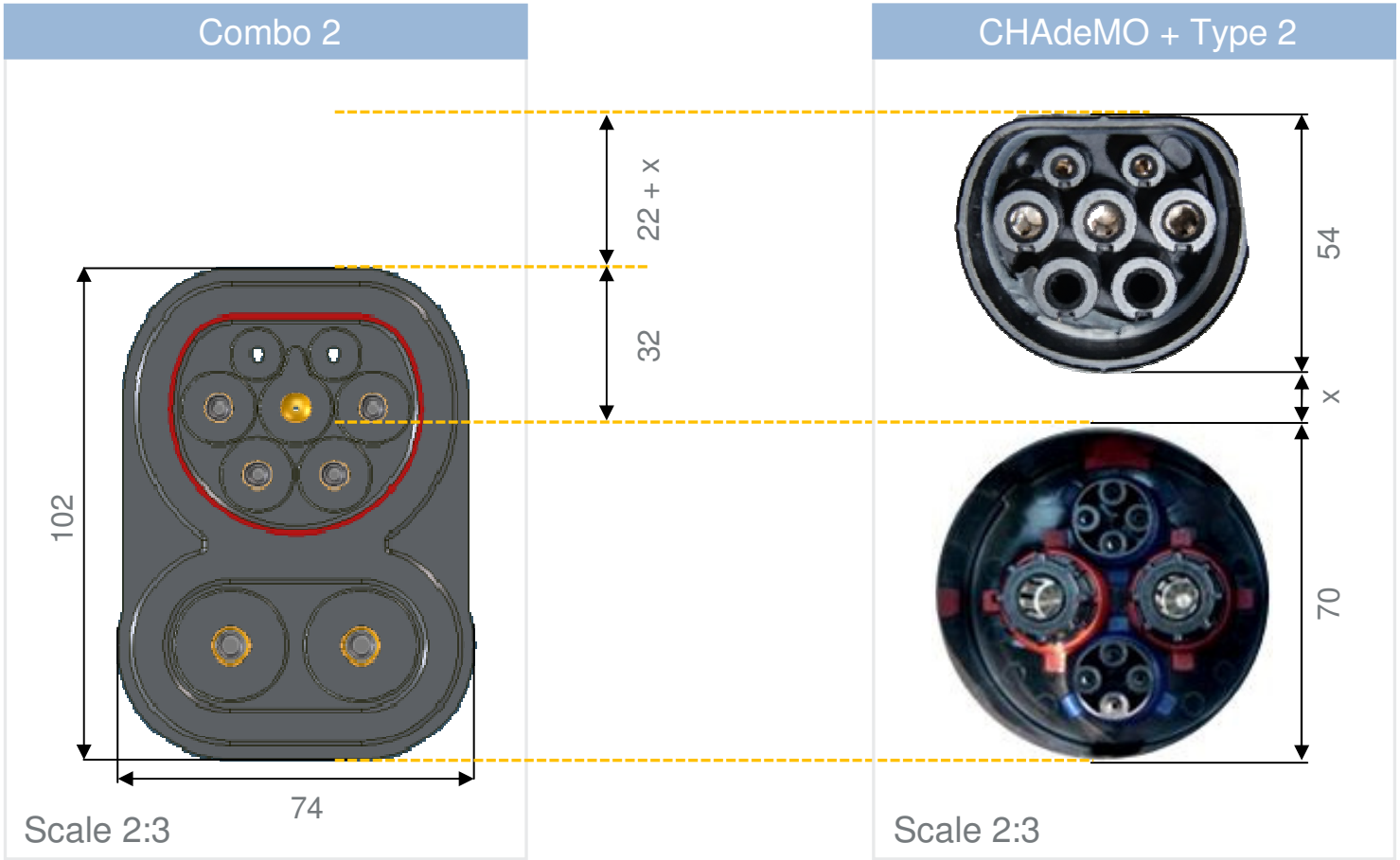

Impact on Vehicle Costs – Combined System vs Separate Systems

Separation of AC and DC charging systems has significant extra costs.
Total cost for customer is reduced by application of Combined Charging System.

Combined Charging System

- Integrated electric architecture which implements all relevant AC and DC charging scenarios
- Integration of AC and DC in one single inlet

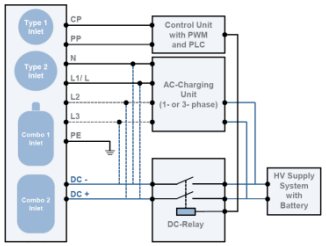

AC plus DC Charging

CHAdeMO with separate charging systems

- No integrated architecture for both AC and DC charging
- Separate AC and DC connectors with two inlets in the vehicle

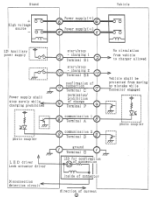

DC Charging

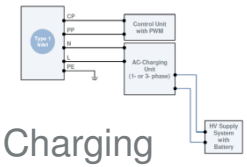

AC Charging

Consequences of a second separated charging system:
- Module costs much higher than 50€ according to expert evaluation*
- Loss of installation space and freedom of design through additional inlet

*depends on implementation

Efficiency of Combined Charging

Integration of AC and DC in the vehicle architecture may be applied to charging stations accordingly.

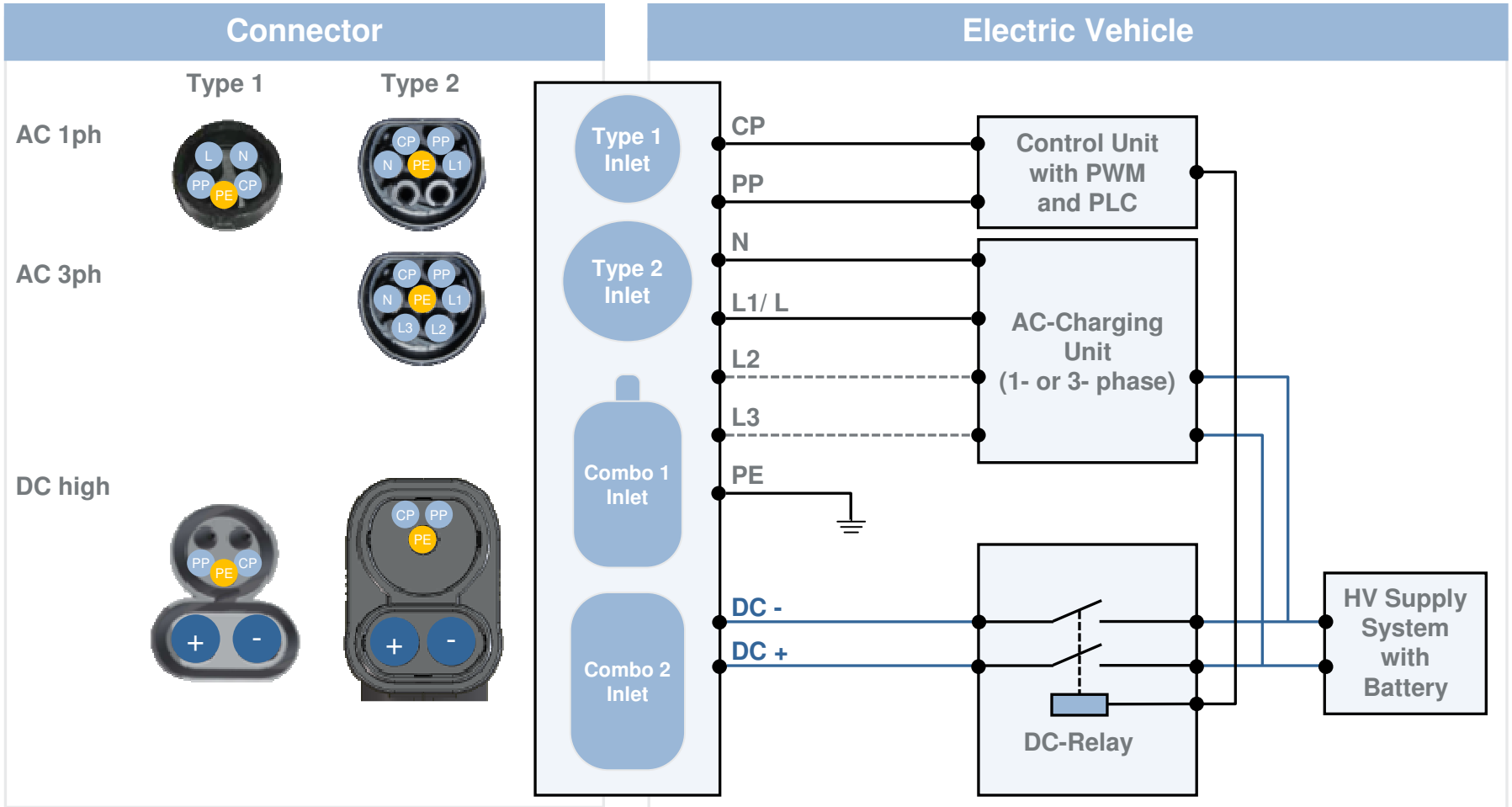

Combined Charging System

Low Complexity and Cost Optimized:
Cost efficient re-use of multiple parts, resulting in win – win situation.

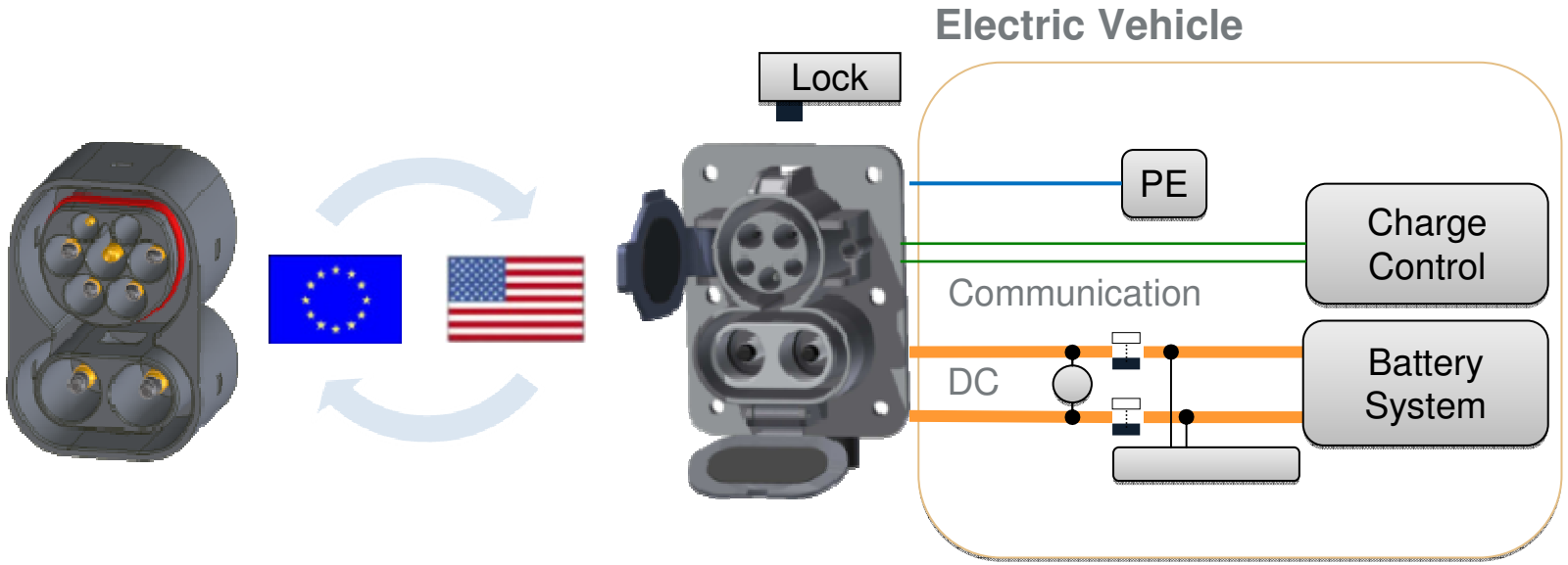

Benefits

- One inlet
- No extra design required
- DC re-uses the complete AC communication and adds only DC specific data
- Extensive use of same parts

Design Combo Inlet

Easy Handling and Widely Spread User Acceptance: Single car design concept that enables fuel tank as well as combined AC/ DC charging inlet.

The combo inlet fits behind typical fuel doors

No need for variants

Simplified Architecture

To focus on the relevant components for high power DC charging

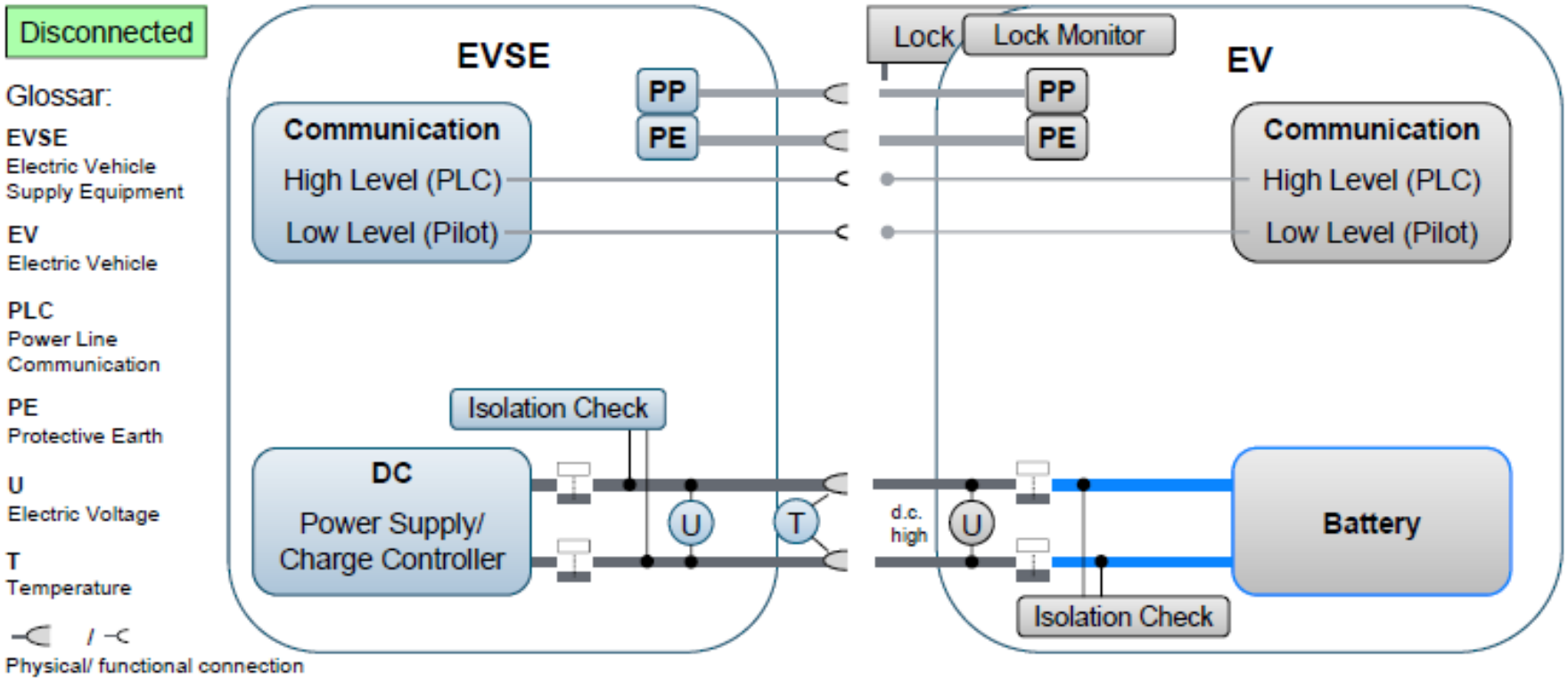

High Power DC Charging

Pilot enters state B instantly (very fast hardware based communication). Vehicle immobilized.

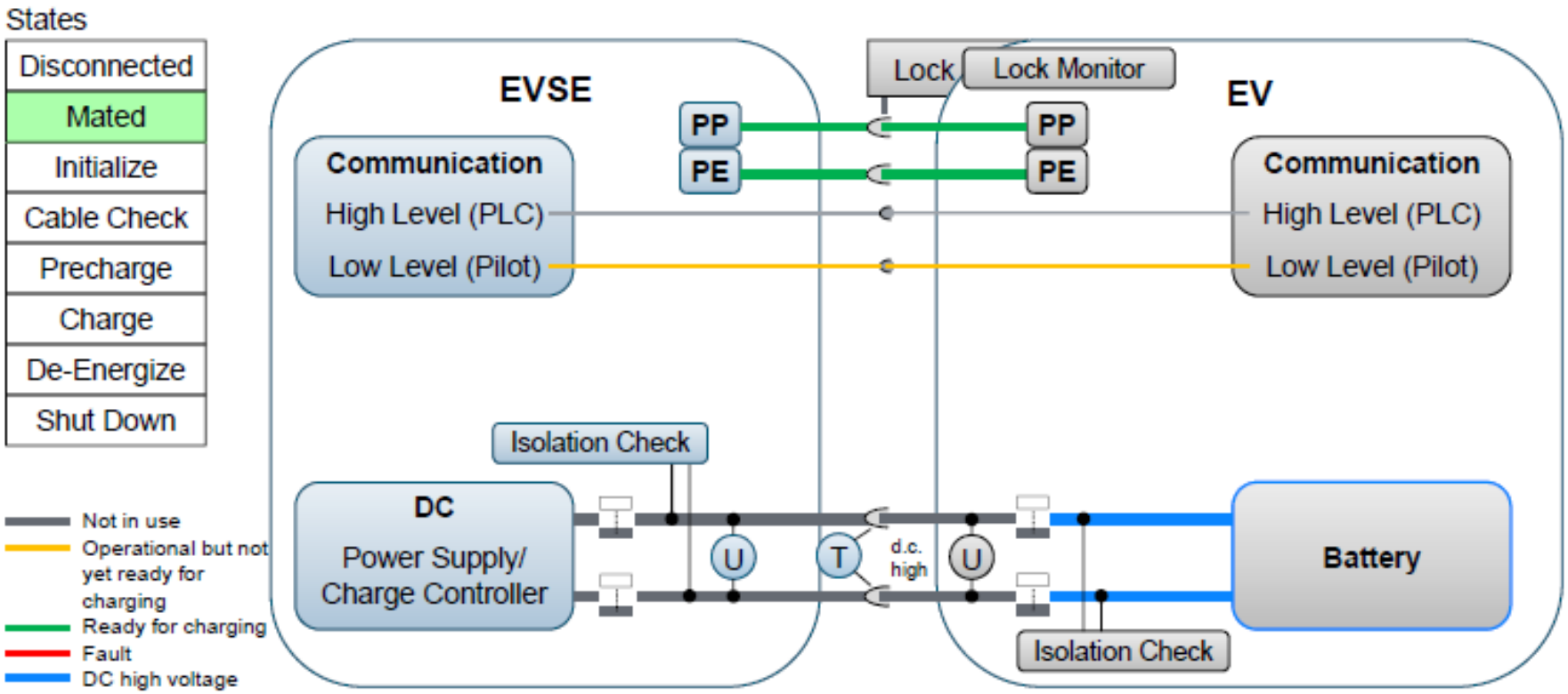

High Power DC Charging

Close lock. Establish PLC communication: Exchange operating limits and parameters of charging. In the end, pilot enters state C.

States

- Disconnected
- Mated
- Initialize
- Cable Check
- Precharge
- Charge
- De-Energize
- Shut Down

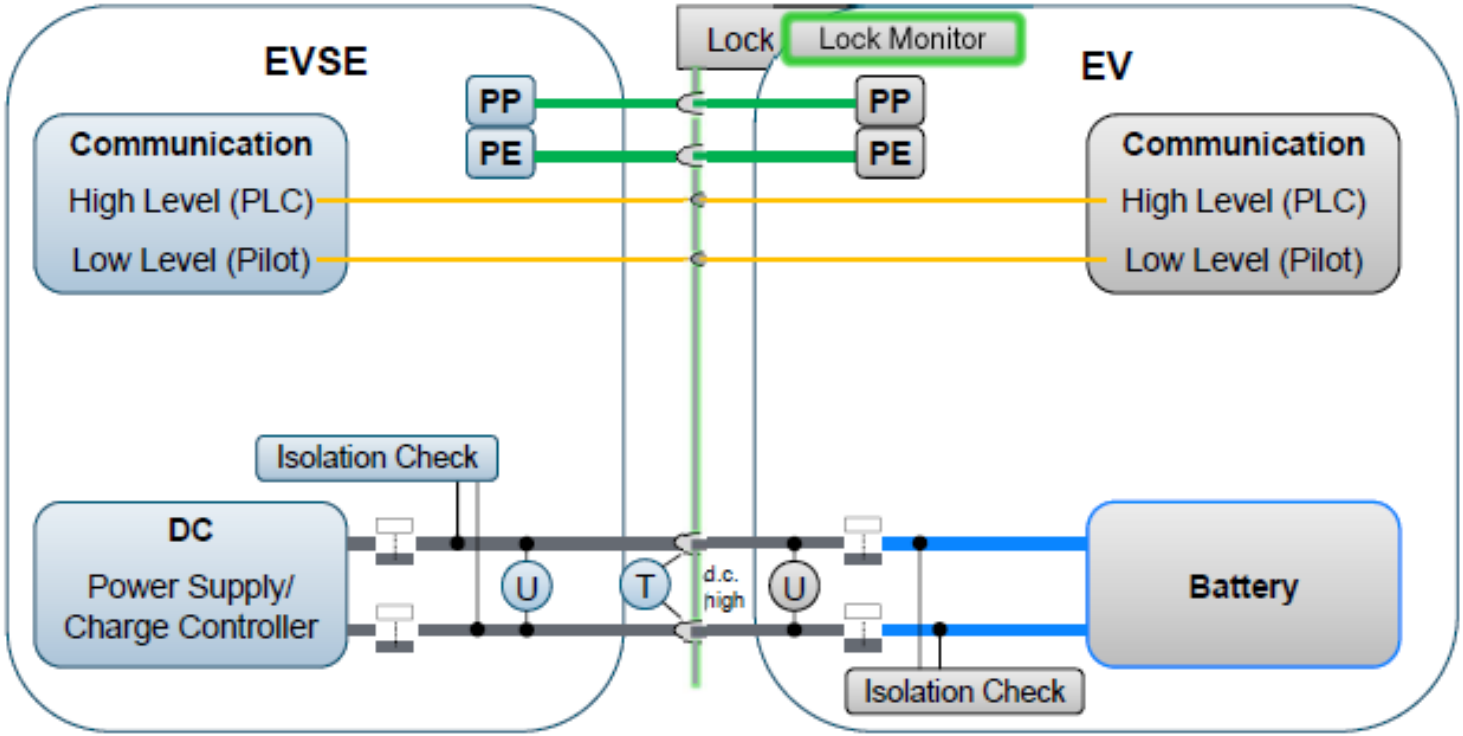

High Power DC Charging

EVSE performs isolation monitor self test and then initial internal isolation check.
EV performs initial internal isolation check.

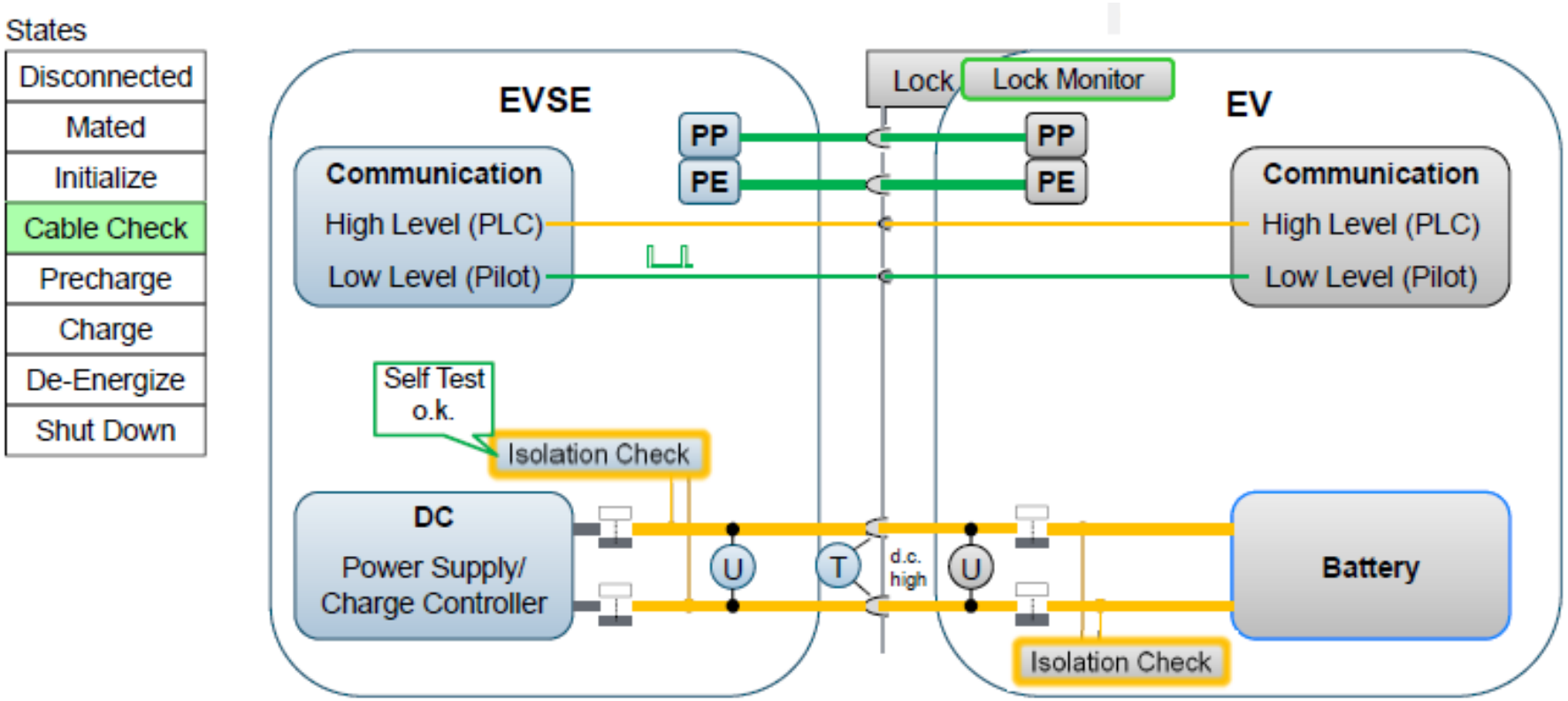

High Power DC Charging

EVSE enables high power DC output. EV requests voltage to synchronize with battery level. Voltage plausibility check is performed. EV closes DC relays.

States

- Disconnected
- Mated
- Initialize
- Cable Check
- Precharge
- Charge
- De-Energize
- Shut Down

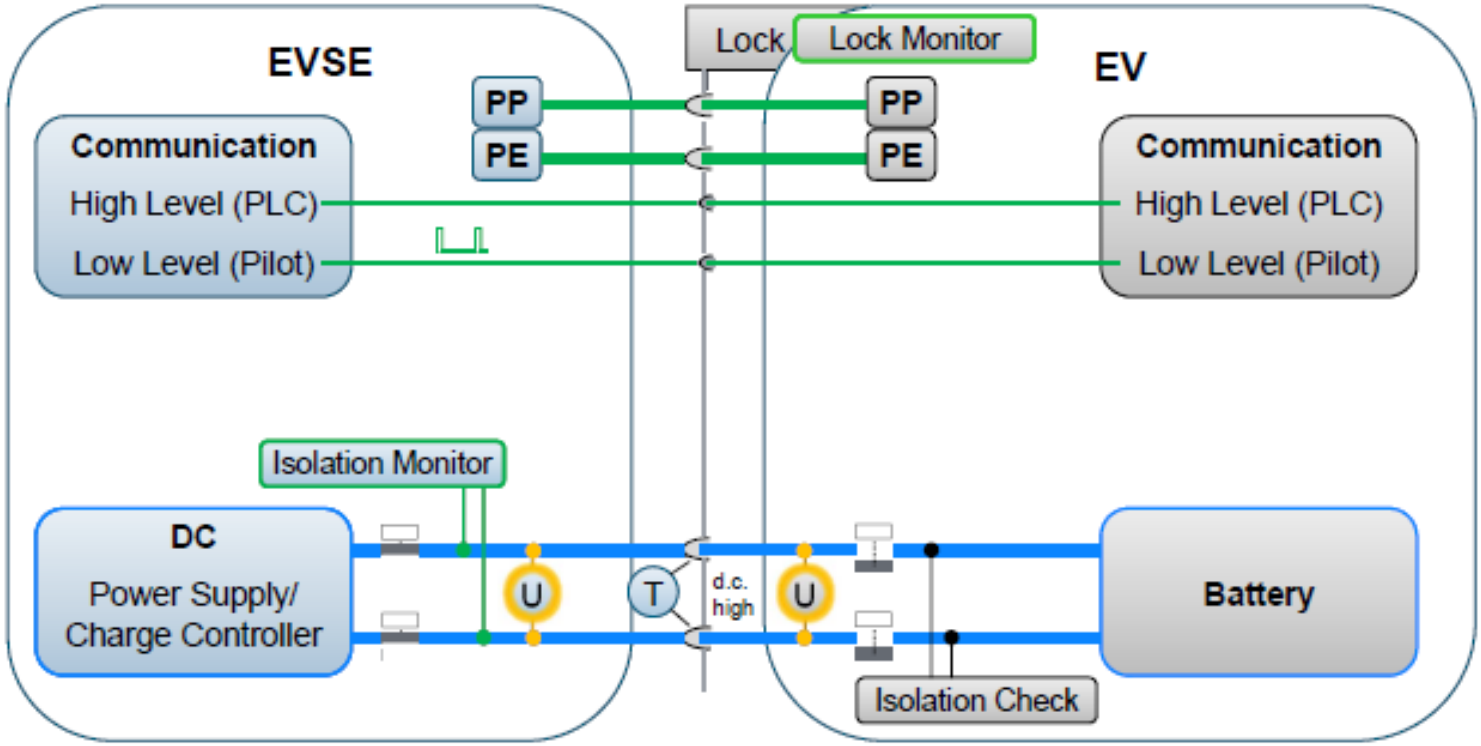

High Power DC Charging

EVSE transfers energy per EV request.
Continuous monitoring of lock, isolation, voltage and temperature.

States

Disconnected
Mated
Initialize
Cable Check
Precharge
Charge
De-Energize
Shut Down

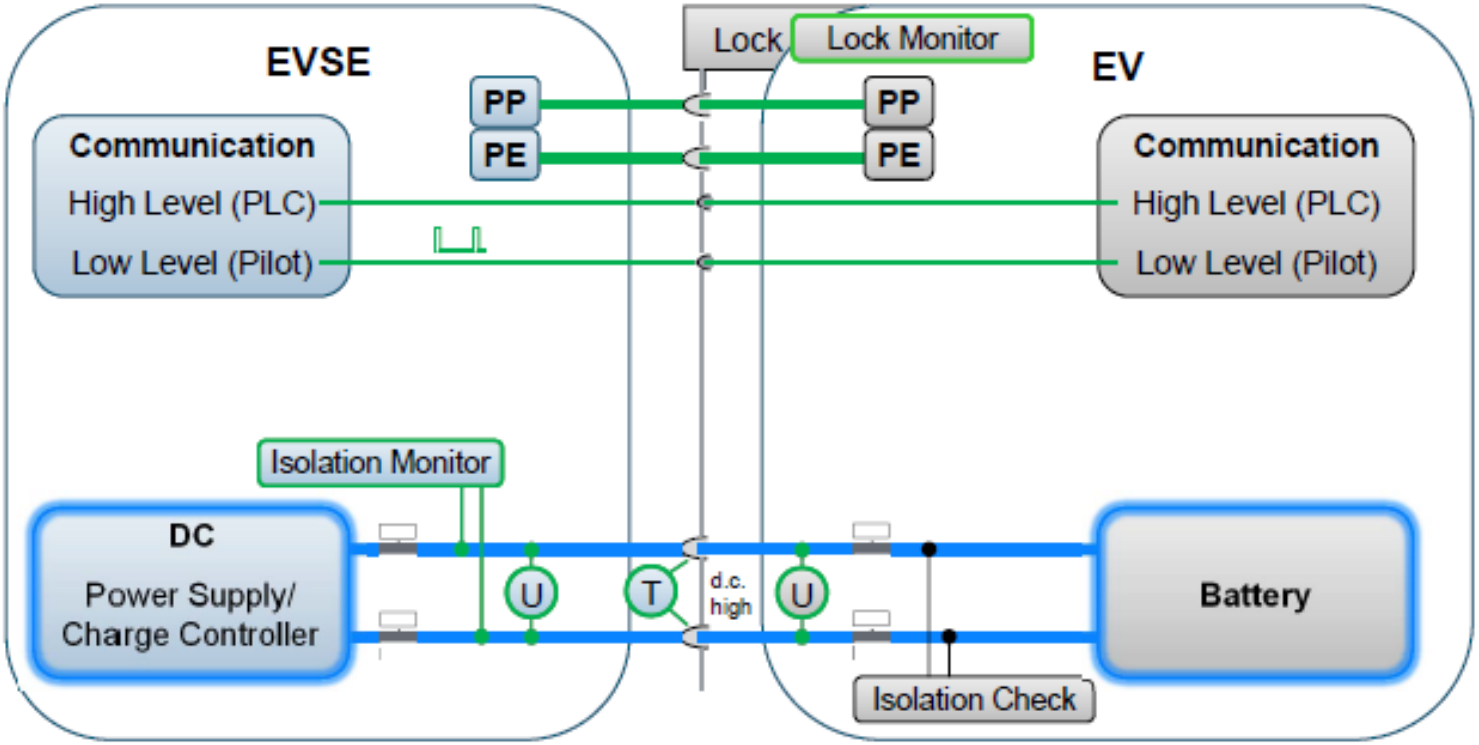

High Power DC Charging

Per EV request and pilot state B, EVSE regulates current close to zero and voltage close to UBat (descending rate of 100 A/s).

States

Disconnected
Mated
Initialize
Cable Check
Precharge
Charge
De-Energize
Shut Down

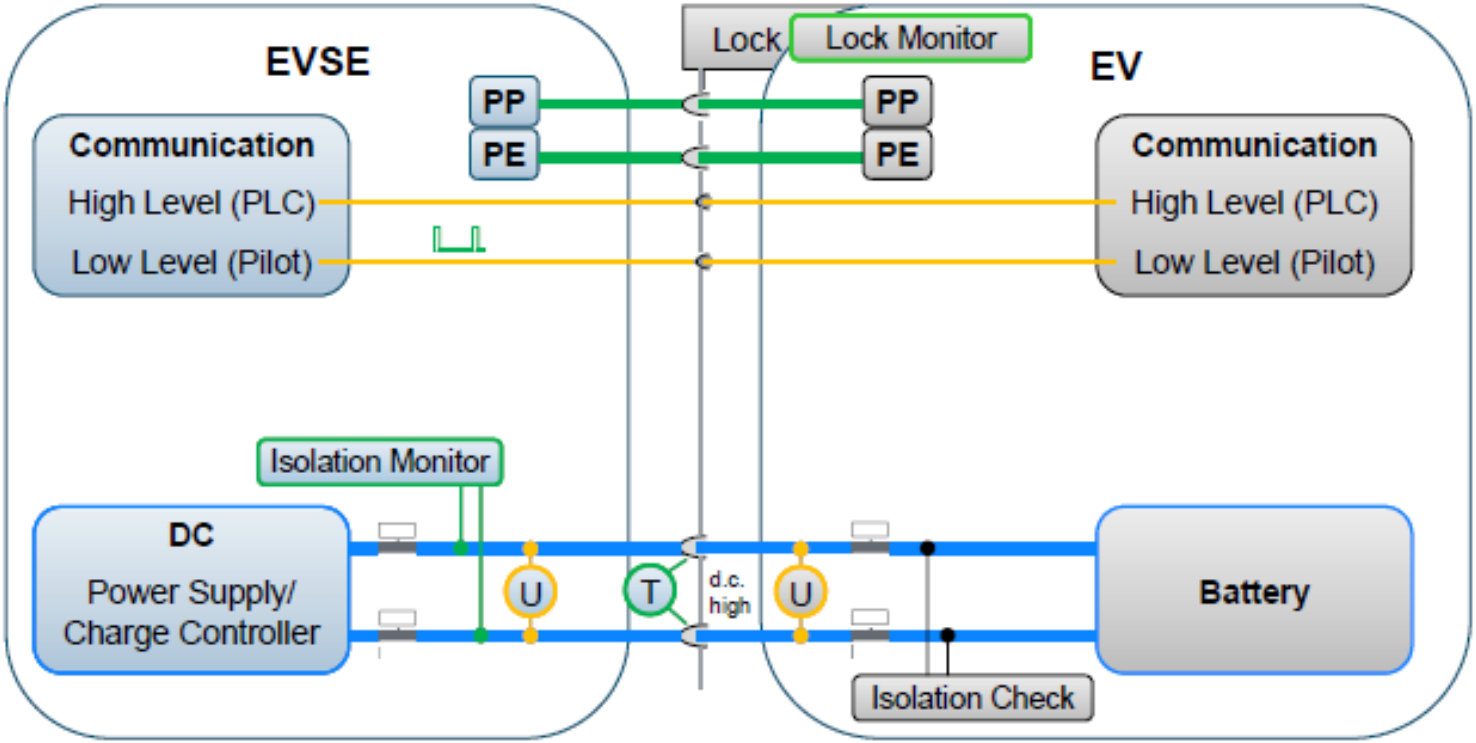

High Power DC Charging

EV and EVSE open relays. EVSE disables high power DC supply. Any monitoring will be stopped. Lock is disabled. PLC communication is terminated.

States

- Disconnected
- Mated
- Initialize
- Cable Check
- Precharge
- Charge
- De-Energize
- Shut Down

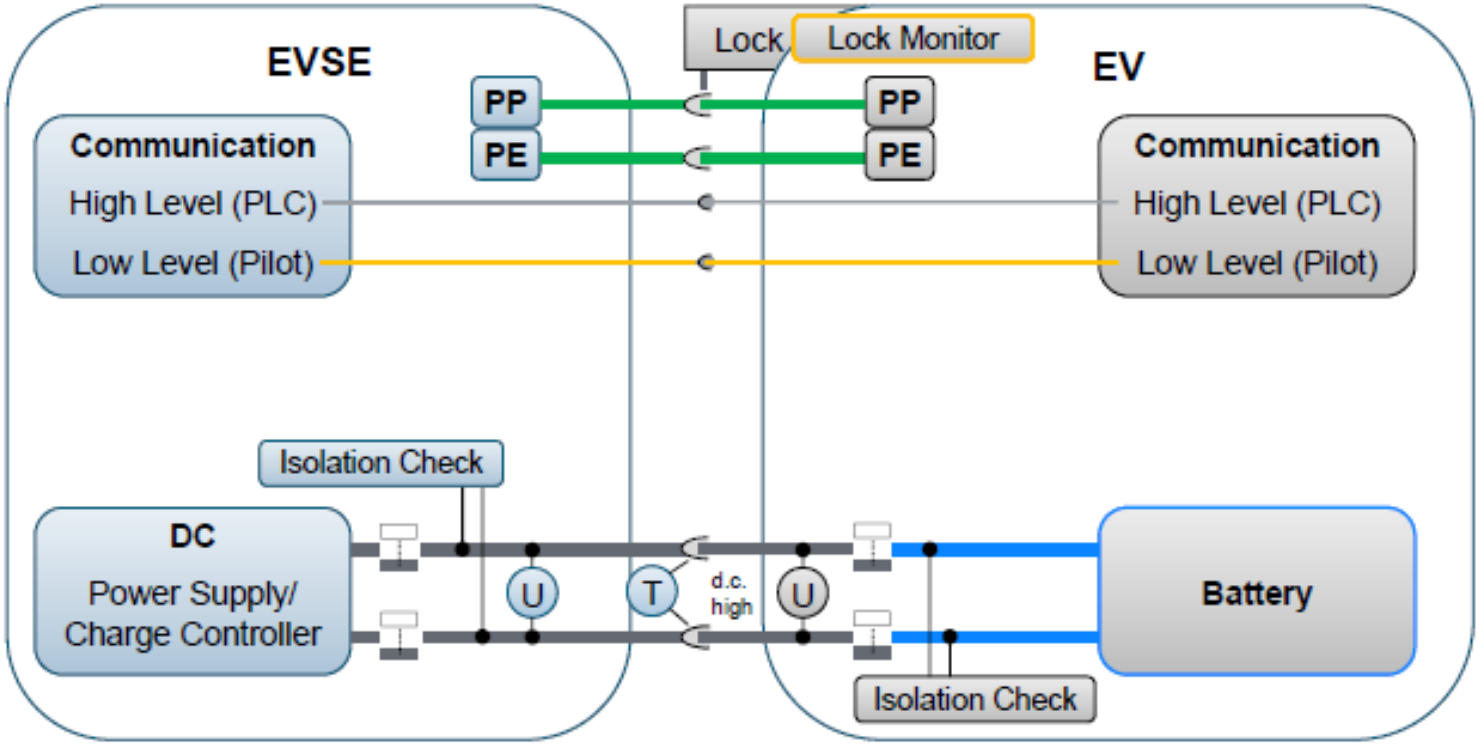

High Power DC Charging

Mobilize vehicle.

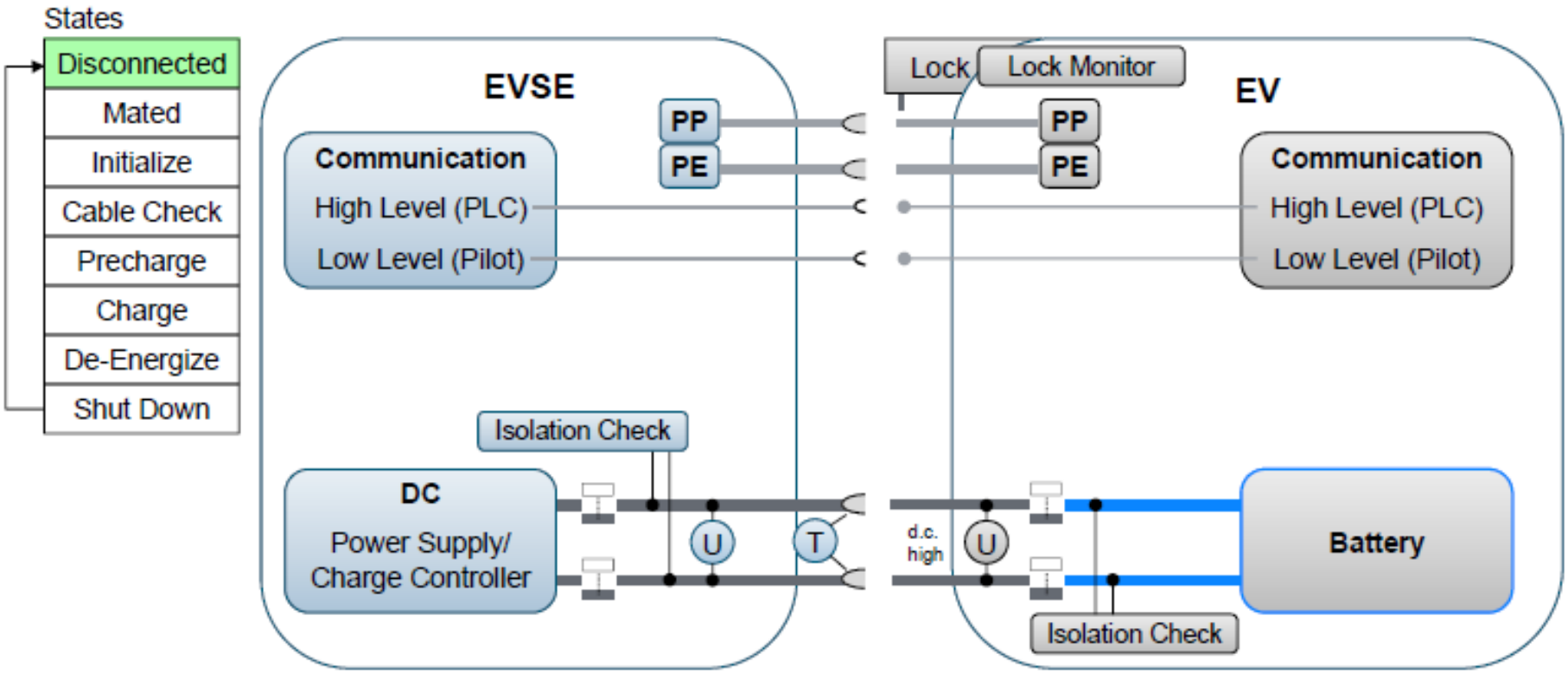

Charging Communication for DC Charging

The charging communication between vehicle and charger is standardized in ISO/IEC 15118 in close cooperation with SAE.

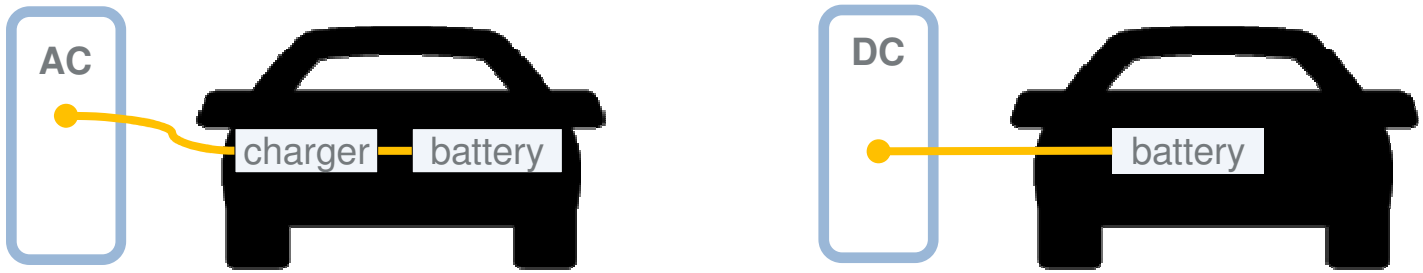

Tasks

- Charging control requires a permanent communication between vehicle and charge pump.
- Current and voltage are adjusted continuously during charging

Goal

- One communication system for all charging modes, world-wide:
- Requirements and functionality
- Transmission technology
- SW protocols

Solution

- PLC-based communication ISO/IEC 15118 for all charging modes applying IEEE 1901 HomePlug Greenphy, IPV6 and data security

One Charging Communication for all Charging Modes

The Charging Communication shall realize intelligent charging with high comfort by one implementation for both AC and DC charging.

Controlled charging

- Support of controlled intelligent charging based on dynamic rates
- Forecast of network load through planned charging
- Support of fleet- and load-management
- Active control of network load

AC and DC charging control

- Authentication with the same methods for AC and DC Charging
- DC Charging takes control over voltage and status information
- Same communication technology for AC and DC Charging

Value added services

- Certified payment and accounting system
- Future integration of vehicles in home networks or cloud services
- Integration of Electric Vehicles into Smart Grid

Simple realisation

- Using existing connections
- One implementation for all charging modes

Charging Protocol defined by ISO/ IEC 15118

DC Charging communication is standardized based on existing AC Charging communication.

DC Charging and AC Charging use the same protocol stack

- IPv6 based protocol
- Transport layer with dedicated security measured
- Flexible XML-based messages
- AC as well as DC messages

ISO/IEC15118-3 focus on HomePlug GreenPhy as Layer 1 & Layer 2 solution

- HomePlug GreenPhy on Control Pilot
- Uses GreenPhy SLAAC for EV/EVSE Association
- Common Layer1 / Layer2 solution for AC and DC-Charging

Layer 7 – Application	Smart Charge Protocol (Application Layer + Session Layer)	SLAAC (Stateless Address Autoconfiguration)	Optional: DHCP (Dyn. Host Conf. Protocol)
Layer 6 – Presentation	EXI – Efficient XML interchange		
Layer 5 – Session	V2GTP (Vehicle to Grid Transfer Protocol)	Optional: HTTP (Hypertext Transfer Protocol)	
Layer 4 – Transport	TLS (Transport Layer Security 1.0) TCP (Transmission Control Protocol)	UDP (User Datagram Protocol)	
Layer 3 – Network	IPv6 (Internet Protocol)		
Layer 2 – Data Link	IEEE1901 HomePlug GreenPHY		
Layer 1 – Physical			

Station for (Semi-)Public Infrastructure in Europe

Minimal infrastructure should be realized with a dedicated charging station.
No specific equipment requirements for semi-public or private areas.

Strategic Impact

- DC charging station without discrimination of AC charging as required by ACEA
- Backward compaible design of public infrastructure

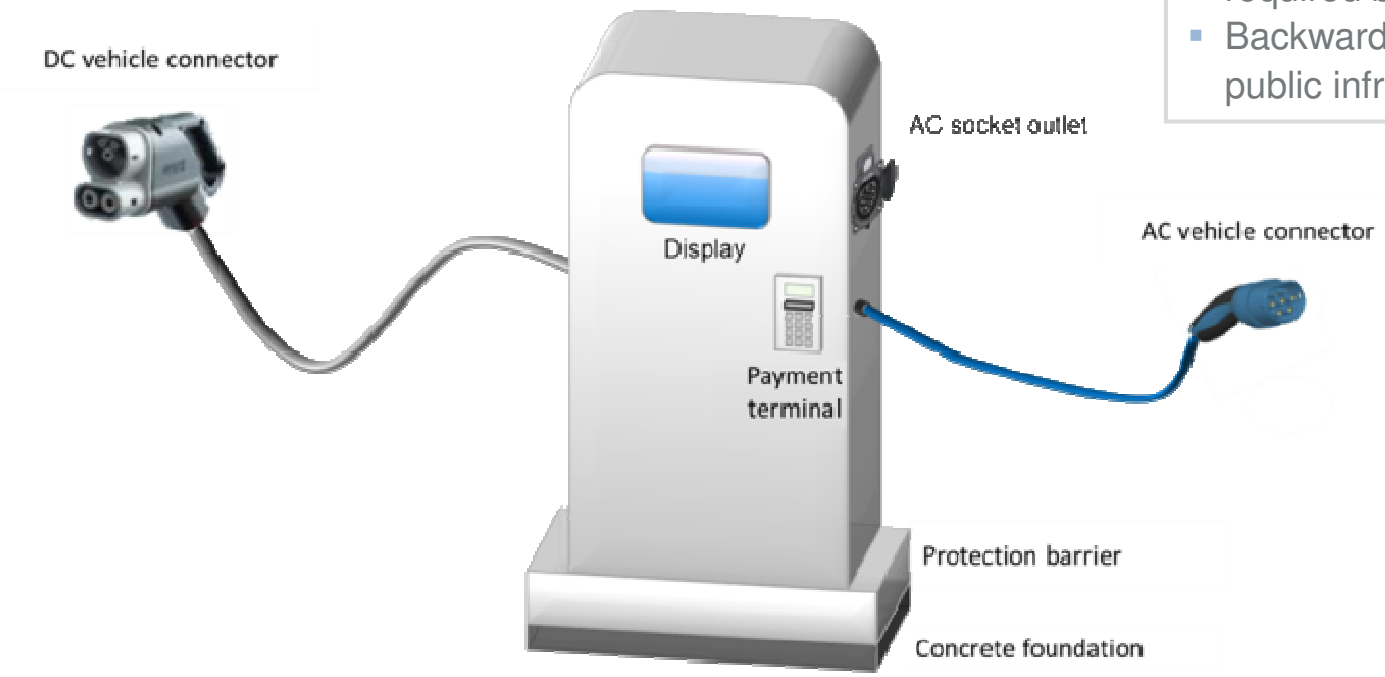

Relevant International Standards for the Charging Interface

The charging system is comprised by a set of related standards.

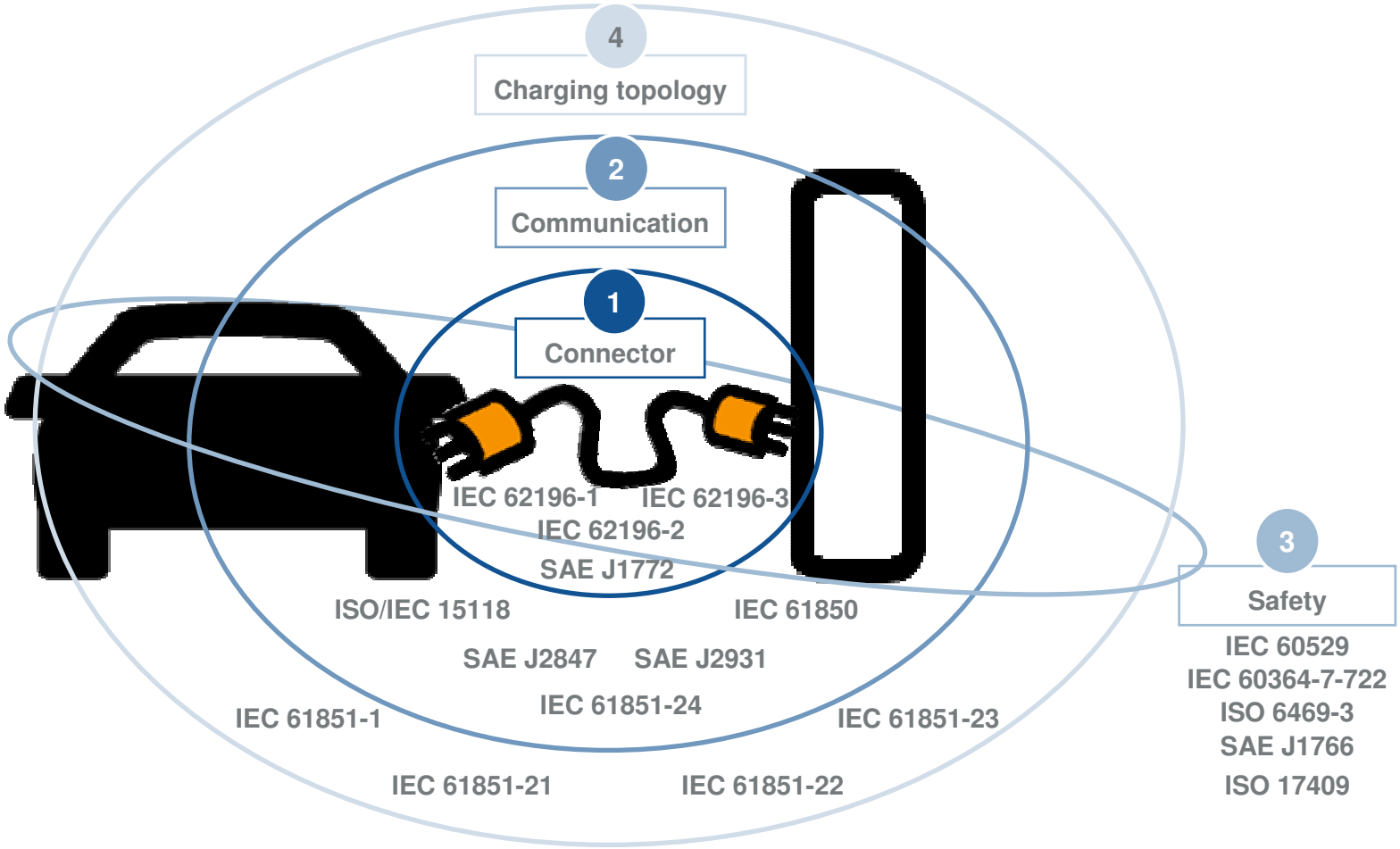

Standardization

Standards for DC charging are ready and implementation baseline defined.

Scope

- DC systems according to Combined Charging Systems will be created according to existing standards:
  - Connector: IEC 62196-3 CDV
  - Topology: IEC 61851-23 CDV
  - Communication: DIN Spec 70121
- DIN SPEC 70121 refers to ISO / IEC 15118-1 DIS, -2 DIS and 15118-3

Benefits

- Series production of DC-Charging ongoing, Transparent requirements for all products on the market
- Common agreement by all stakeholders
- Standards aligned with SAE

Implementation Baseline

- Series products available End of 2012
- Vehicles on the market in 2013 with DC option will comply to implementation baseline 2012 defined by IEC CDV 62196-3, IEC CDV 61851-23 and DIN SPEC 70121

Summary of using DC Charging in Modellregion Munich

Final project presentation.

Impressions

Facts

- 17.10.2011 in Munich
- Ca. 100 guests
  - stakeholder from industry and government
  - national press, customers
- LIVE CHARGING DEMONSTRATION
  - DC-Type 2 with PLC
  - with 70A (up to 28kW)
  - 85km e-range in 30min
- Press echo:

BMW: Neues Ladesystem für E-Autos — 18.10.2011 Auto Bild News

Laden leicht gemacht

Projekt von Siemens und BMW

E-Cars mit Gleich- und Wechselstrom laden

Siemens präsentiert flexibles Schnellladesystem ENERGIE & TECHNIK

Schnellladen für Autos mit Gleich- und Wechselstrom

Electric Cars with Combo Inlet.

Announced cars for 2013.

GM
Chevy Spark

BMW
I3

Volkswagen
e-up!

Strategic Assessment of existing Charging Systems

Main bodies have adopted the Combined Charging System as charging technology.

- All members of the European Association of Automotive Manufacturers ACEA support the Combined Charging System for Europe:

ACEA

- BMW, DAF, Daimler, Fiat, Ford of Europe, General Motors Europe, Hyundai Motor Europe, Jaguar Land Rover, MAN, Porsche, PSA, Renault, Scania, Toyota Motor Europe, Volkswagen, Volvo Cars, and AB Volvo.

SAE International®

- SAE has developed the Combined Charging System in the U.S.
- The Combined Charging System is the US solution for electric vehicle charging – from AC charging to ultra-fast DC charging.

- Nearly all global automotive companies support the Combined Charging System including US manufactures Chrysler Group LLC, Ford Motor Company, and General Motors.

Combined Charging System

Combined Charging: the universal charging system for electric vehicles has been demonstrated with vehicles of German OEMs at the 15th international conference „Electronics in Vehicles“ at Baden-Baden on October 12-13, 2011.

Combined Charging System at EVS 26

Combined Charging System at eCarTec